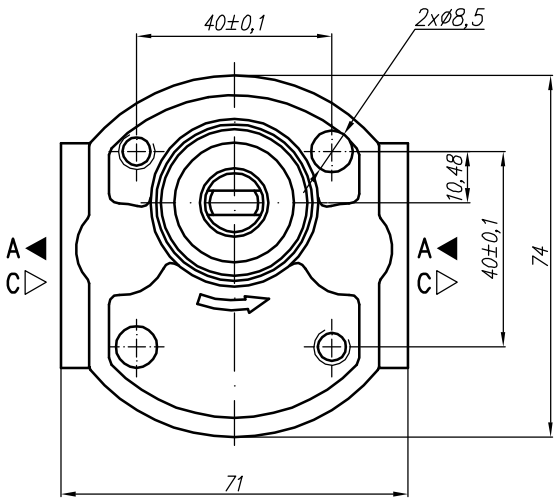

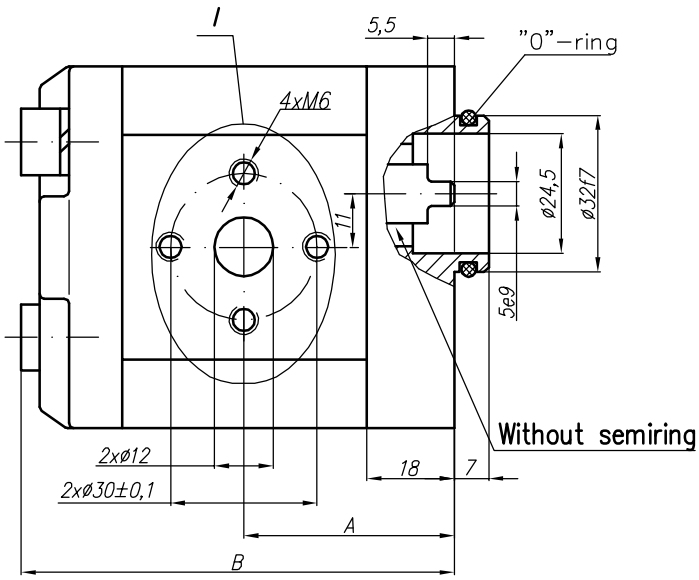

Variants:
...X475 - Normal version (flange);
...X475M - for M ports (see the picture I and the table below);
...X475G - for G ports (see the picture I and the table below);
...X475U - for U ports (see the picture I and the table below).

I – variants

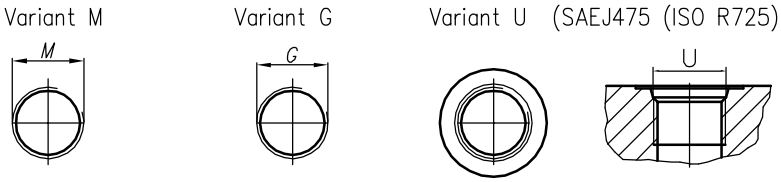

Type	Displacement	Flow		Pressure	max Speed	Dimension								
		DW	DWPPD	[USGP	Q	$	%	,QOHW 2XWOH						
	FP UHY	O PLQ	O PLQ	EDU	USP	PP	PP	0	*	8	0	*	8	
$ & ;														
$ & ;														
$ & ;														
$ & ;														
$ & ;														
* 10A(C)2,65X475	2,65	3,74	8,72	250	3500	42,4	87,8							
$ & ;														
$ & ;														
$ & ;														
* 10A(C)4,7X475	4,7	6,63	15,46	250	3500	46,1	97,1							
$ & ;														
$ & ;														
$ & ;														
$ & ;														
* 10A(C)8X475	8	11,40	15,20	150	2000	53,4	109,7							
$ & ;														
$ & ;														

7KHVH SXPSV RQO\ XQGHU D VSHFLDO RUGHU