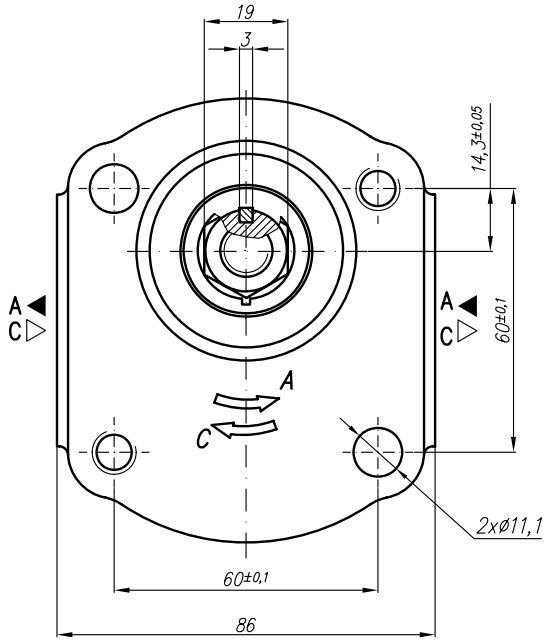


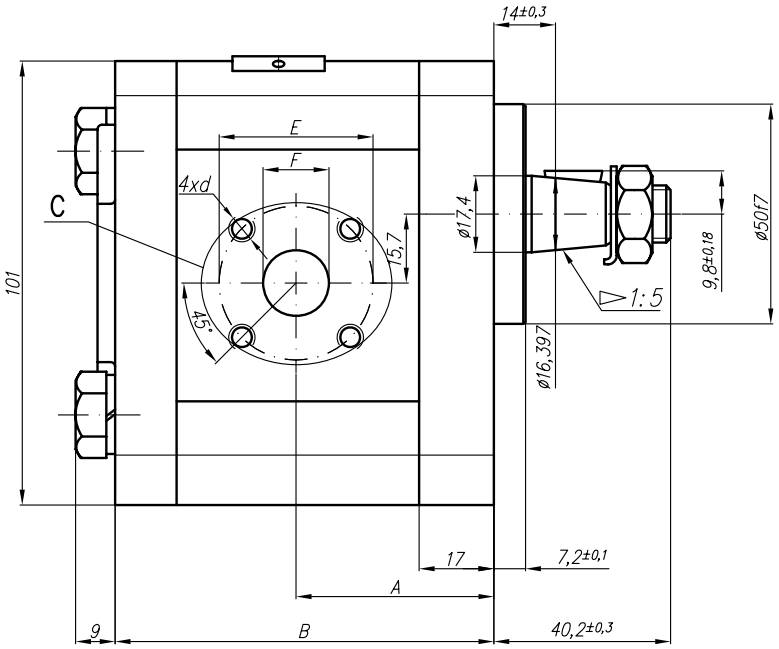


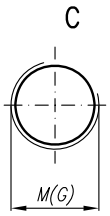


Variants M(G):
Designation 20A(C)...X007M(G)

| Type | Displacement | Flow | | Pressure | max Speed | Dimension | | | | | | | | | | | | | | | |
|---|---|---|---|---|---|---|---|---|---|---|---|---|---|---|---|---|---|---|---|---|---|
| | | at 1500 rpm | at max rpm | $P_{nom}$ | n | A | B | Inlet | | | | | | Outlet | | | | | |
| | $cm^3$/rev | l/min | l/min | bar | rpm | mm | mm | E | F | d | M | G | U | E | F | d | M | G | U |
| 20A(C)4,5X007... | 4,5 | 6,14 | 14,33 | 250 | 3500 | 37,3 | 75,1 | 40 | 15 | M6-6H | M20x1,5 | G1/2 | | 35 | 15 | M6-6H | M16x1,5 | G1/2 | |
| 20A(C)6,3X007... | 6,3 | 8,69 | 20,29 | 250 | 3500 | 38,6 | 78 | | | | | | | | | | | | |
| 20A(C)7X007... | 7 | 9,66 | 22,54 | 250 | 3500 | 42,5 | 82,1 | | 20 | | | G3/4 | | | | | | | |
| 20A(C)8,2X007... | 8,2 | 11,32 | 26,40 | 250 | 3500 | 40,6 | 78 | | | | | | | | | | | | |
| 20A(C)10X007... | 10 | 13,95 | 32,55 | 250 | 3500 | 45 | 87 | | | | | | | | | | | | |
| 20A(C)11X007... | 11,3 | 15,76 | 36,78 | 250 | 3500 | 45 | 89,1 | | | | | | | | | | | | |
| 20A(C)12X007... | 12 | 16,92 | 39,48 | 250 | 3500 | 45 | 90,3 | | | | | | | | | | | | |
| 20A(C)14X007... | 14 | 19,95 | 46,55 | 250 | 3500 | 45 | 93,4 | | | | | | | | | | | | |
| 20A(C)15X007... | 15 | 21,60 | 36,00 | 250 | 2500 | 45 | 94,9 | | | | | | | | | | | | |
| 20A(C)16X007... | 16 | 23,04 | 38,40 | 250 | 2500 | 45 | 96,5 | | | | | | | | | | | | |
| 20A(C)19X007... | 19 | 27,36 | 45,60 | 200 | 2500 | 45 | 101,5 | | | | | | | | | | M20x1,5 | | |
| 20A(C)22X007... | 22 | 31,68 | 42,24 | 180 | 2000 | 52,5 | 106,5 | | | | | | | | | | | | |
| 20A(C)25X007... | 25 | 36,00 | 48,00 | 160 | 2000 | 57,2 | 111,4 | | | | | | | | | | | | |
| | | | | | | | | | | | | | | | | | | | |
| 20A(C)14X007H... | 14 | 20,16 | 47,04 | 250 | 3500 | 53,3 | 103,7 | 40 | 20 | M6-6H | M20x1,5 | G3/4 | G3/4 | 35 | 15 | M6-6H | M16x1,5 | G1/2 | |
| 20A(C)15X007H... | 15 | 21,60 | 43,20 | 250 | 3000 | 54 | 105,2 | | | | | | | | | | | | |
| 20A(C)16X007H... | 16 | 23,04 | 46,08 | 250 | 3000 | 54,9 | 106,8 | | | | | | | | | | | | |
| 20A(C)17,3X007H. | 17,3 | 24,91 | 49,82 | 230 | 3000 | 56 | 108,9 | | | | | | | | | | | | |
| 20A(C)18,2X007H. | 18,2 | 26,21 | 52,42 | 210 | 3000 | 56,8 | 110,5 | | | | | | | | | | | | |
| 20A(C)19X007H... | 19 | 27,36 | 54,72 | 200 | 3000 | 57,4 | 111,8 | | | | | | | | | | M20x1,5 | | |
| 20A(C)22X007H... | 22 | 31,68 | 52,80 | 180 | 2500 | 59,9 | 116,8 | | | | | | | | | | | | |
| 20A(C)25X007H... | 25 | 36,00 | 60,00 | 160 | 2500 | 62,3 | 121,7 | | | | | | | | | | | | |
| 20A(C)28X007H... | 28 | 40,32 | 67,20 | 130 | 2500 | 64,8 | 126,5 | | | | M27x2 | | | 40 | 20 | | | G3/4 | |
| 20A(C)32X007H... | 32 | 46,08 | 61,44 | 120 | 2000 | 68 | 132,8 | | | | | | | | | | | | |
| 20A(C)36X007H... | 36 | 51,84 | 69,12 | 100 | 2000 | 71,2 | 139,4 | | | | | | | | | | | | |