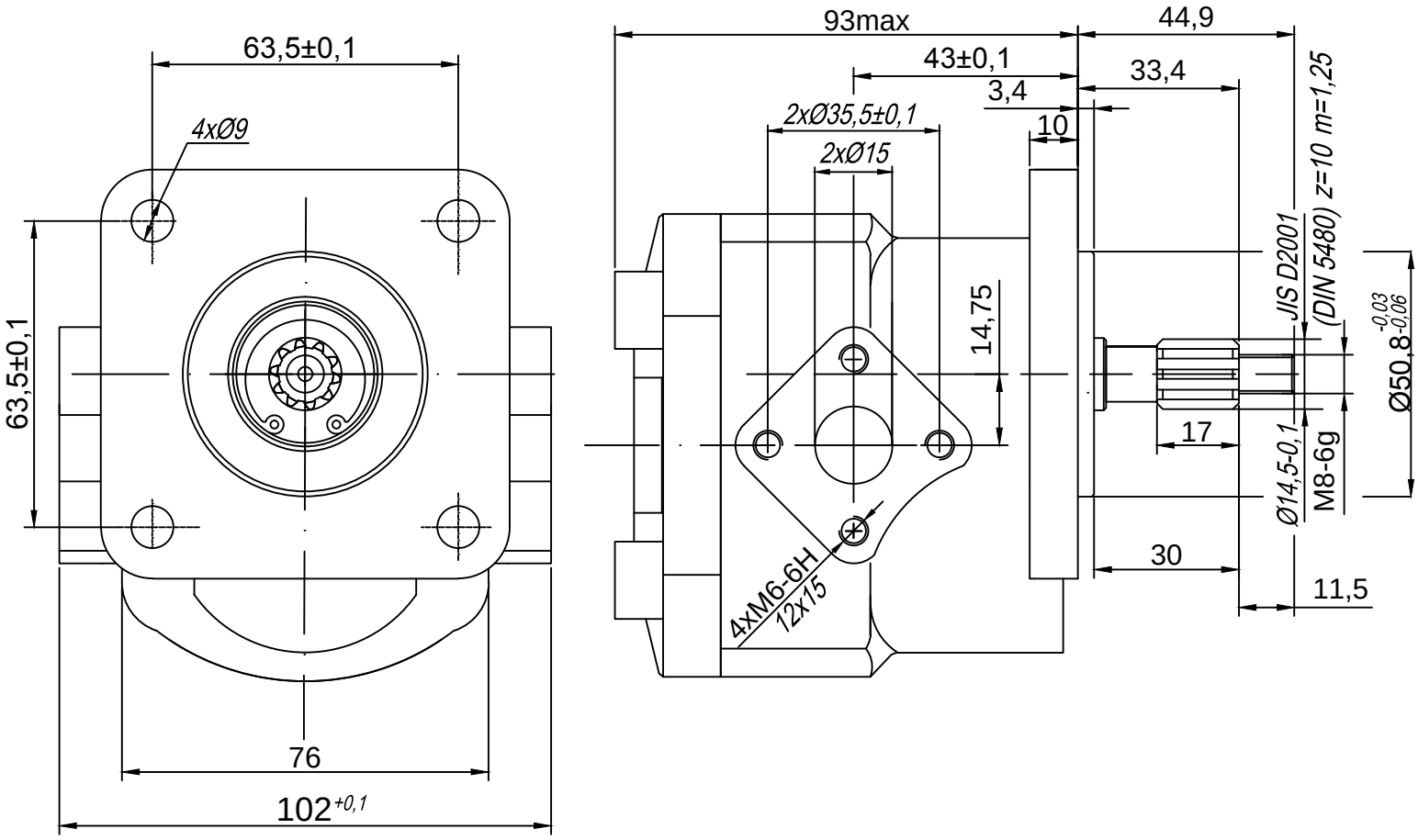

Type	Displacement	Flow		Pressure	max Speed	Dimension							
		at 1500 rpm	at max rpm	P_{nom}	n	A	B	Inlet			Outlet		
	cm^3/rev	l/min	l/min	bar	rpm	mm	mm	M	G	U	M	G	U
15A(C) 8,2 X 885	8,2	11,44	26,7	200	3500								
15A(C) 10,1 X 885	10,12	14,12	28,2	180	3000								
15A(C) 12 X 885	12,05	16,81	28,0	160	2500								