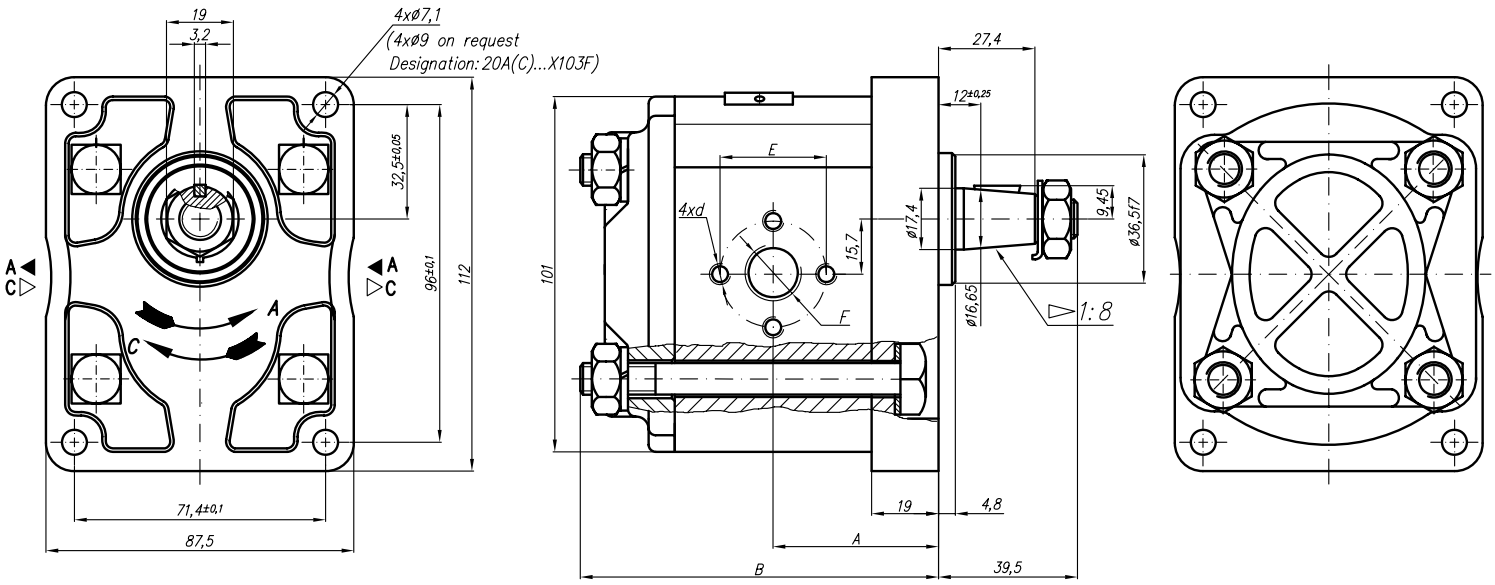

Type	Displacement	Flow		Pressure	max Speed	Dimension							
		at 1500 rpm	at max rpm	P_{nom}	n	A	B	Inlet			Outlet		
	cm^3/rev	l/min	l/min	bar	rpm	mm	mm	E	F	d	E	F	d
20A(C)4,5X103	4,5	6,14	14,33	250	3500						30,2		1/4"-20UNC
20A(C)6,3X103	6,3	8,69	20,29	250	3500								
20A(C)8,2X103	8,2	11,32	26,40	250	3500								
20A(C)10X103	10	13,95	32,55	250	3500			39,7	G1/2"	5/16"-18UNC		G3/8"	
20A(C)11X103	11,3	15,76	36,78	250	3500	48	102						
20A(C)12X103	12	16,92	39,48	250	3500								
20A(C)14X103	14	19,95	46,55	250	3500								
20A(C)15X103	15	21,60	36,00	250	2500								
20A(C)16X103	16	23,04	38,40	250	2500								
20A(C)19X103	19	27,36	45,60	200	2500								
20A(C)22X103	22	31,68	42,24	180	2000								
20A(C)25X103	25	36,00	48,00	160	2000								