Designed as a I section of tandem pump 22A(C)...X172/...X173.

Rotation "A"

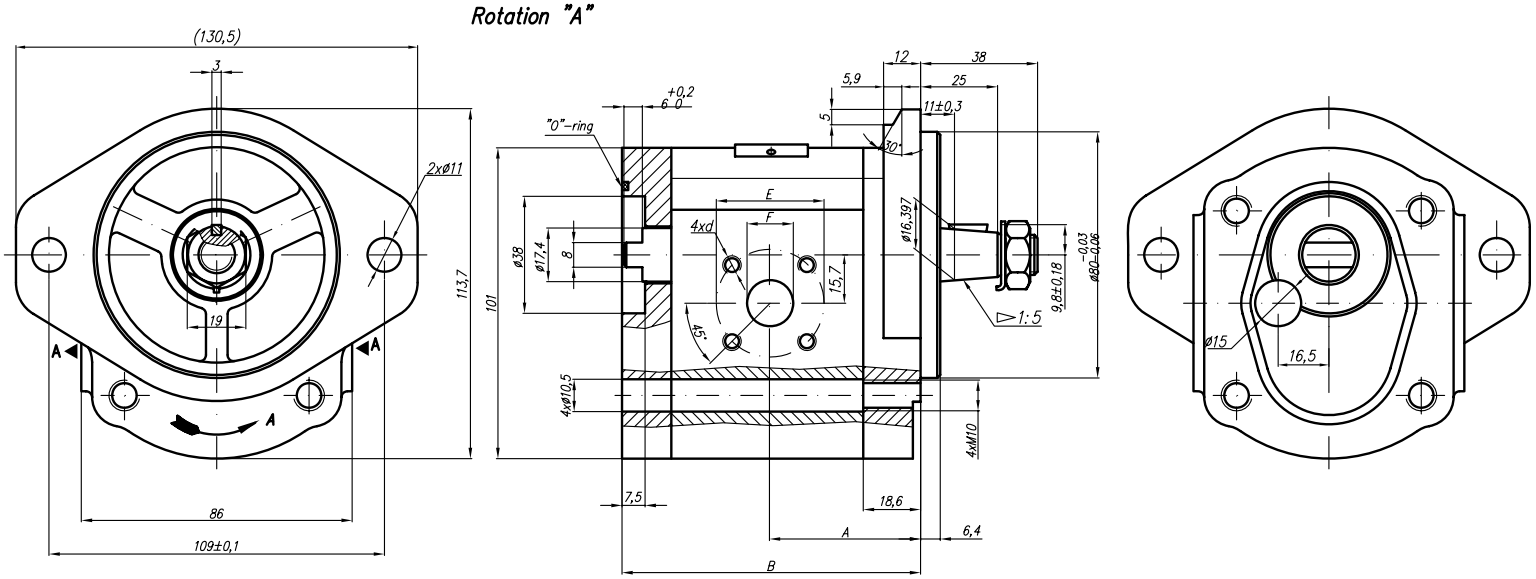

Rotation "C"

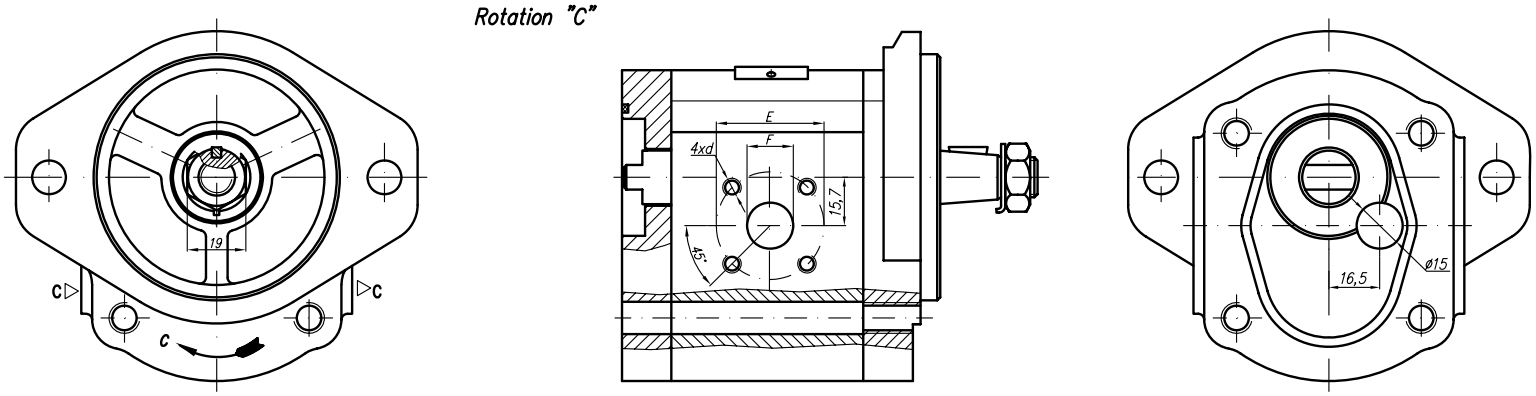

Symbol

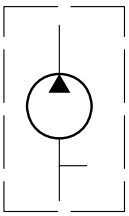

Type	Displacement	Flow		Pressure	max Speed	Dimension							
		at 1500 rpm	at max rpm	P_{nom}	n	A	B	Inlet			Outlet		
	cm^3/rev	l/min	l/min	bar	rpm	mm	mm	E	F	d	E	F	d
20A(C)4,5X172	4,5	6,14	14,33	250	3500			40		M6-6H	35	15	M6-6H
20A(C)6,3X172	6,3	8,69	20,29	250	3500								
20A(C)8,2X172	8,2	11,32	26,40	250	3500				20				
20A(C)10X172	10	13,95	32,55	250	3500								
20A(C)11X172	11,3	15,76	36,78	250	3500								
20A(C)12X172	12	16,92	39,48	250	3500								
20A(C)14X172	14	19,95	46,55	250	3500	49,8	97						
20A(C)15X172	15	21,60	36,00	250	2500	50,6	98,5						
20A(C)16X172	16	23,04	38,40	250	2500	49,8	100,1						
20A(C)19X172	19	27,36	45,60	200	2500	53,6	105,1						
20A(C)22X172	22	31,68	42,24	180	2000								