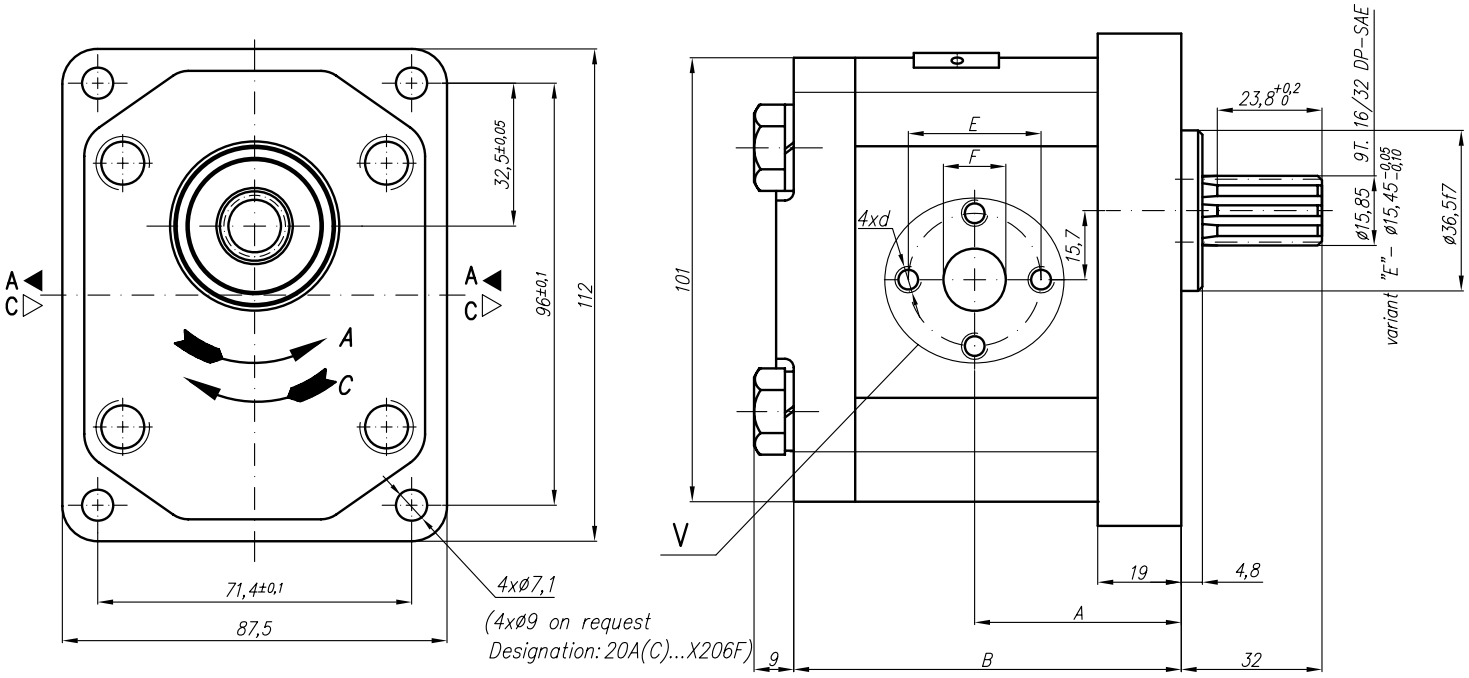


V
Variants for ports – M; G; U

Designations:

...X206 – Normal version (flanges);
...X206M – Metric threads;
...X206G – GAS threads;
...X206U – SAE threads;

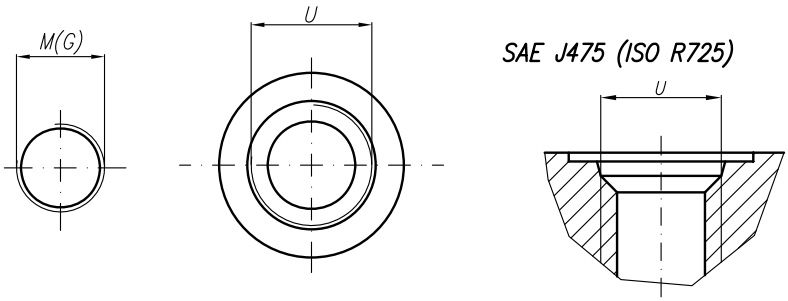


| Type | Displacement | Flow | | Pressure | max Speed | Dimension | | | | | | | | | | | | | | | | | |
|---|---|---|---|---|---|---|---|---|---|---|---|---|---|---|---|---|---|---|---|---|---|---|---|
| | | at 1500 rpm | at max rpm | $P_{nom}$ | n | A | B | Inlet | | | | | | Outlet | | | | | |
| | $cm^3$/rev | l/min | l/min | bar | rpm | mm | mm | E | F | d | M | G | U | E | F | d | M | G | U |
| 20A(C)4,5X206... | 4,5 | 6,14 | 14,33 | 250 | 3500 | 42,5 | 80 | 30,2 | 13,1 | M6-6H | M20x1,5 | G 1/2 | 1 1/16"-12UNF | 30,2 | 13,1 | M6-6H | M16x1,5 | G 1/2 | 7/8"-14UNF |
| 20A(C)6,3X206... | 6,3 | 8,69 | 20,29 | 250 | 3500 | 42,5 | 80 | | | | | | | | | | | | |
| 20A(C)8,2X206... | 8,2 | 11,32 | 26,40 | 250 | 3500 | 42,5 | 80 | | | | | | | | | | | | |
| 20A(C)10X206... | 10 | 13,95 | 32,55 | 250 | 3500 | 47 | 89 | 39,7 | 19 | M8-6H | | G 3/4 | | | 14,2 | | | | |
| 20A(C)11X206... | 11,3 | 15,76 | 36,78 | 250 | 3500 | 48 | 91,1 | | | | | | | | | | | | |
| 20A(C)12X206... | 12 | 16,92 | 39,48 | 250 | 3500 | 48,6 | 92,3 | | | | | | | | | | | | |
| 20A(C)14X206... | 14 | 19,95 | 46,55 | 250 | 3500 | 50 | 95,4 | | | | | | | | | | | | |
| 20A(C)15X206... | 15 | 21,60 | 36,00 | 250 | 2500 | 51 | 96,9 | | | | | | | | | | | | |
| 20A(C)16X206... | 16 | 23,04 | 38,40 | 250 | 2500 | 52 | 98,6 | | | | | | | | | | | | |
| 20A(C)19X206... | 19 | 27,36 | 45,60 | 200 | 2500 | 54 | 103,5 | | | | | | | | | | M20x1,5 | | |
| 20A(C)22X206... | 22 | 31,68 | 42,24 | 180 | 2000 | 57 | 108,5 | | | | | | | | | | | | |
| 20A(C)25X206... | 25 | 36,00 | 48,00 | 160 | 2000 | 59,2 | 113,4 | | | | | | | 39,7 | 19 | M8 | | | |