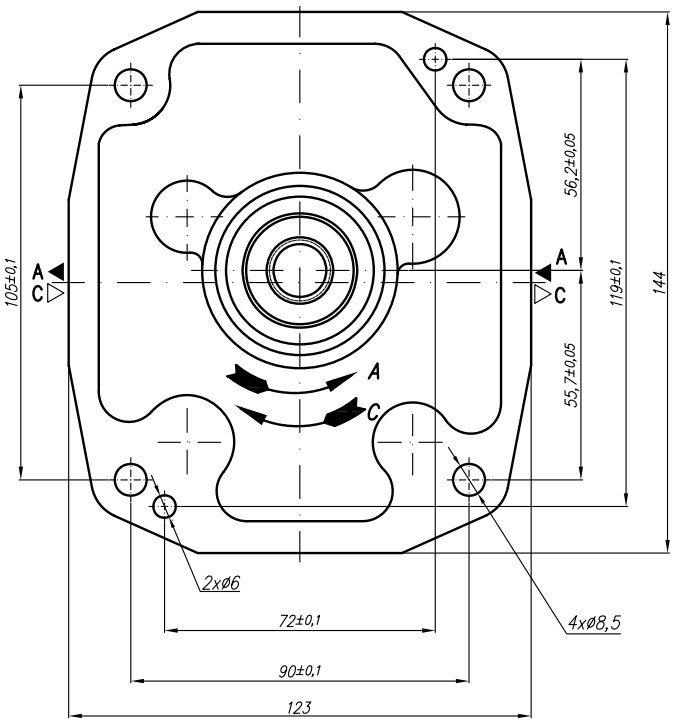

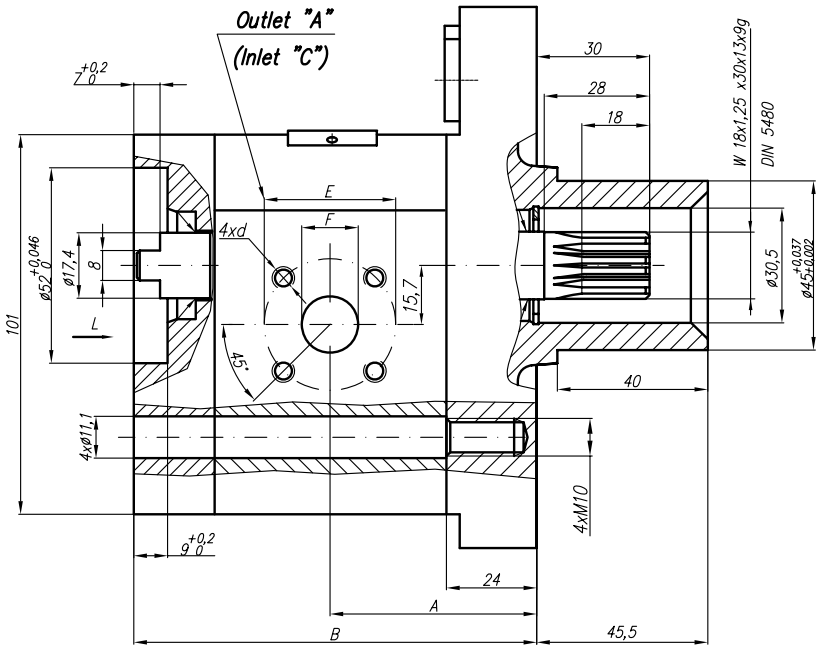

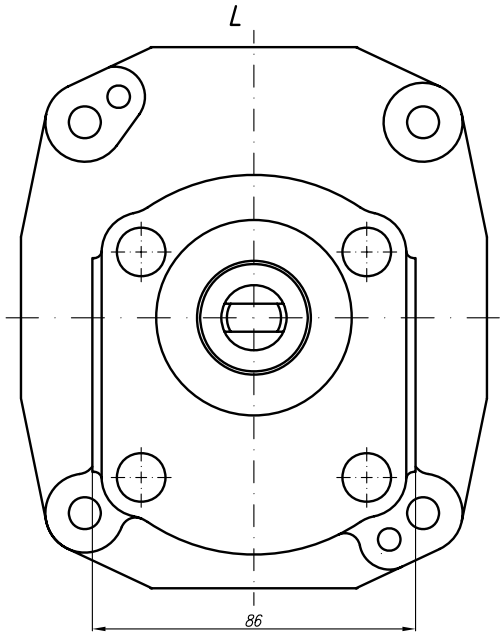

Type	Displacement	Flow		Pressure	max Speed	Dimension							
		at 1500 rpm	at max rpm	P_{nom}	n	A	B	Inlet			Outlet		
	cm^3/rev	l/min	l/min	bar	rpm	mm	mm	E	F	d	E	F	d
20A(C)4,5X316	4,5	6,14	14,33	250	3500			40	15	M6-6H	30,2	15	M6-6H
20A(C)6,3X316	6,3	8,69	20,29	250	3500								
20A(C)8,2X316	8,2	11,32	26,40	250	3500				20				
20A(C)10X316	10	13,95	32,55	250	3500								
20A(C)11X316	11,3	15,76	36,78	250	3500								
20A(C)12X316	12	16,92	39,48	250	3500								
20A(C)14X316	14	19,95	46,55	250	3500								
20A(C)15X316	15	21,60	36,00	250	2500								
20A(C)16X316	16	23,04	38,40	250	2500	57	110,7						
20A(C)19X316	19	27,36	45,60	200	2500								
20A(C)22X316	22	31,68	42,24	180	2000	61,6	120,7						
20A(C)25X316	25	36,00	48,00	160	2000								