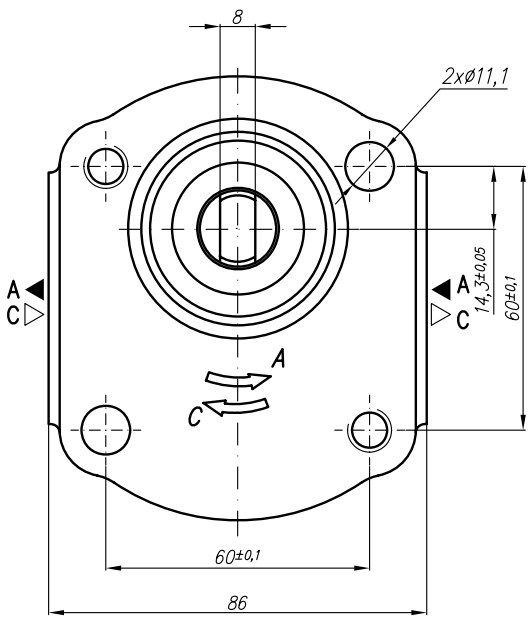

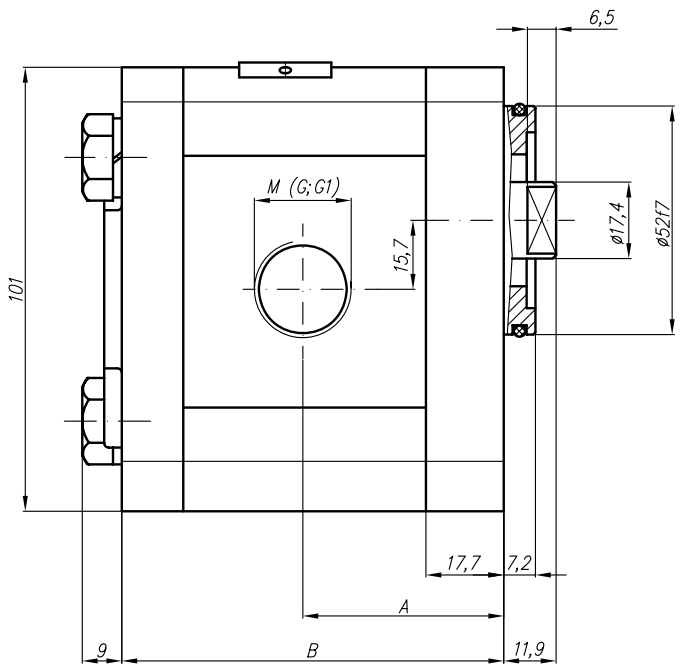

Type	Displacement	Flow		Pressure	max Speed	Dimension							
		at 1500 rpm	at max rpm	P_{nom}	n	A	B	Inlet			Outlet		
	cm^3/rev	l/min	l/min	bar	rpm	mm	mm	M	G	G1	M	G	G1
20A(C)4,5X368	4,5	6,14	14,33	250	3500				G1/2			G1/2	
20A(C)6,3X368	6,3	8,69	20,29	250	3500								
20A(C)8,2X368	8,2	11,32	26,40	250	3500	43,8	84,6			G3/4			G1/2
20A(C)10X368	10	13,95	32,55	250	3500				G3/4				
20A(C)11X368	11,3	15,76	36,78	250	3500	48,2	89,8						
20A(C)12X368	12	16,92	39,48	250	3500								
20A(C)14X368	14	19,95	46,55	250	3500								
20A(C)15X368	15	21,60	36,00	250	2500								
20A(C)16X368	16	23,04	38,40	250	2500								
20A(C)19X368	19	27,36	45,60	200	2500								
20A(C)22X368	22	31,68	42,24	180	2000								
20A(C)25X368	25	36,00	48,00	160	2000								