Designed as a first section of tandem pumps group 21A(C)...X467.../... (II group/I group).

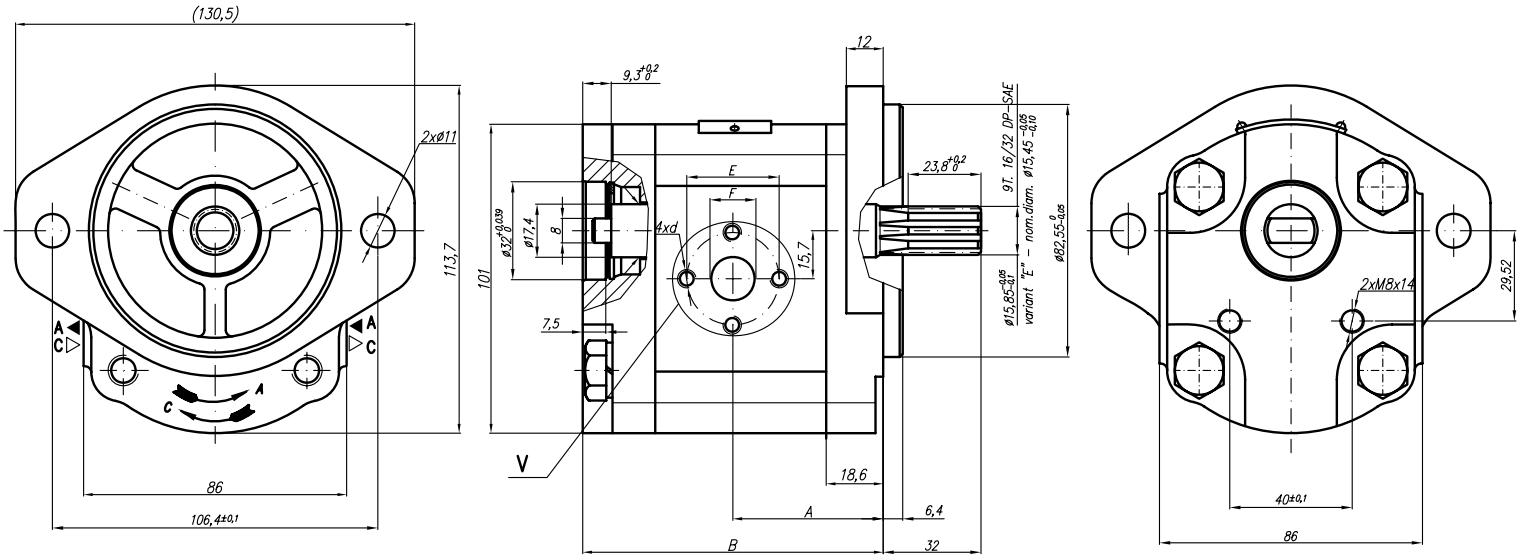

Designations:

...X467 – Normal version (flanges);
...X467M – Metric threads;
...X467G – GAS threads;
...X467U – SAE UNF threads;

V
Variants for ports – M;G;U

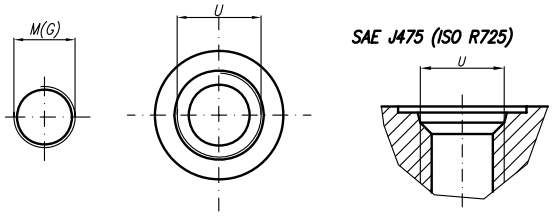

Type	Displacement	Flow		Pressure	max Speed	Dimension														
		at 1500 rpm	at max rpm	P_{nom}	n	A	B	Inlet						Outlet					
	cm^3/rev	l/min	l/min	bar	rpm	mm	mm	E	F	d	M	G	U	E	F	d	M	G	U
20A(C)4,5X467...	4,5	6,14	14,33	250	3500	42,1	89,3	30,2	13,1	M6-6H	M20x1,5	G1/2	1 1/16"-12UNF	30,2	13,1	M6-6H	M16x1,5	G1/2	7/8"-14UNF
20A(C)6,3X467...	6,3	8,69	20,29	250	3500	42,1	89,3												
20A(C)8,2X467...	8,2	11,32	26,40	250	3500	42,1	89,3												
20A(C)10X467...	10	13,95	32,55	250	3500	46,6	98,2	39,7	19	M8-6H		G3/4			14,2				
20A(C)11X467...	11,3	15,76	36,78	250	3500	47,6	100,3												
20A(C)12X467...	12	16,92	39,48	250	3500	48,2	101,6												
20A(C)14X467...	14	19,95	46,55	250	3500	49,8	104,7												
20A(C)15X467...	15	21,60	36,00	250	2500	50,6	106,2												
20A(C)16X467...	16	23,04	38,40	250	2500	51,4	107,8										M20x1,5		
20A(C)19X467...	19	27,36	45,60	200	2500	54	112,8												
20A(C)22X467...	22	31,68	42,24	180	2000	56,5	117,8												
20A(C)25X467...	25	36,00	48,00	160	2000	58,8	122,7							39,7	19	M8			