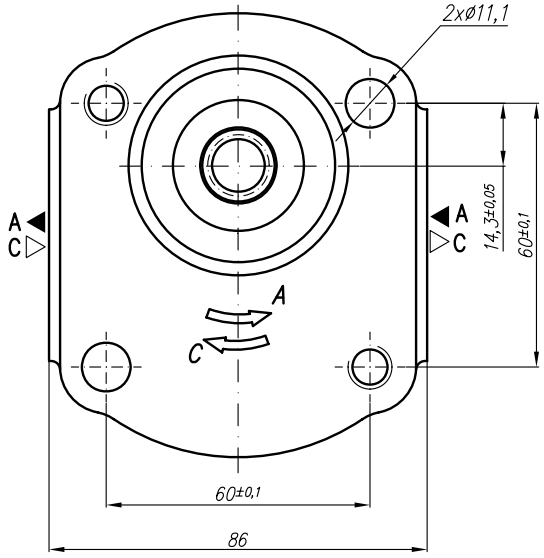

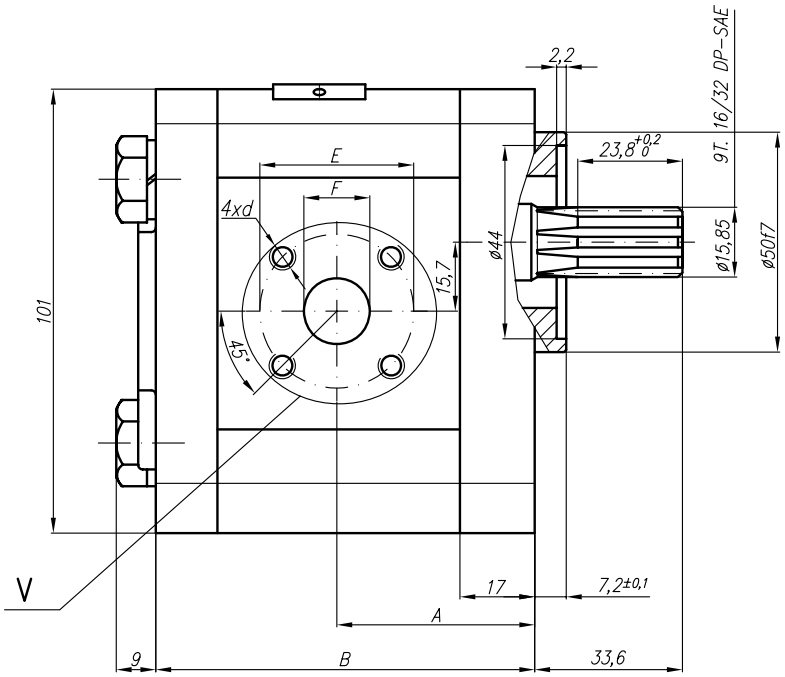

V
Variants for ports – M;G;U

Designations:

...X496 – Normal version (flanges);
...X496M – Metric threads;
...X496G – GAS threads;
...X496U – SAE UNF threads;

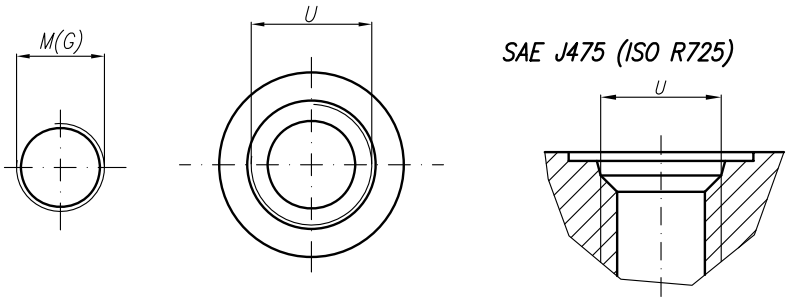

Type	Displacement	Flow		Pressure	max Speed	Dimension															
		at 1500 rpm	at max rpm	P_{nom}	n	A	B	Inlet						Outlet					
	cm^3/rev	l/min	l/min	bar	rpm	mm	mm	E	F	d	M	G	U	E	F	d	M	G	U
20A(C)4,5X496...	4,5	6,14	14,33	250	3500	37,3	75,1	40	15	M6-6H	M20x1,5	G1/2	1 1/16"-12UNF	35	15	M6-6H	M16x1,5	G1/2	7/8"-14UNF
20A(C)6,3X496...	6,3	8,69	20,29	250	3500	38,6	78												
20A(C)8,2X496...	8,2	11,32	26,40	250	3500	40,6	78		20										
20A(C)10X496...	10	13,95	32,55	250	3500	45	87					G3/4							
20A(C)11X496...	11,3	15,76	36,78	250	3500	45	89,1												
20A(C)12X496...	12	16,92	39,48	250	3500	45	90,3												
20A(C)14X496...	14	19,95	46,55	250	3500	45	93,4												
20A(C)15X496...	15	21,60	36,00	250	2500	45	94,9												
20A(C)16X496...	16	23,04	38,40	250	2500	45	96,5										M20x1,5		
20A(C)19X496...	19	27,36	45,60	200	2500	45	101,5												
20A(C)22X496...	22	31,68	42,24	180	2000	52,5	106,5												
20A(C)25X496...	25	36,00	48,00	160	2000	57,2	111,4												