Designed as a II section of tandem pump 22A(C)...X537/...X536.

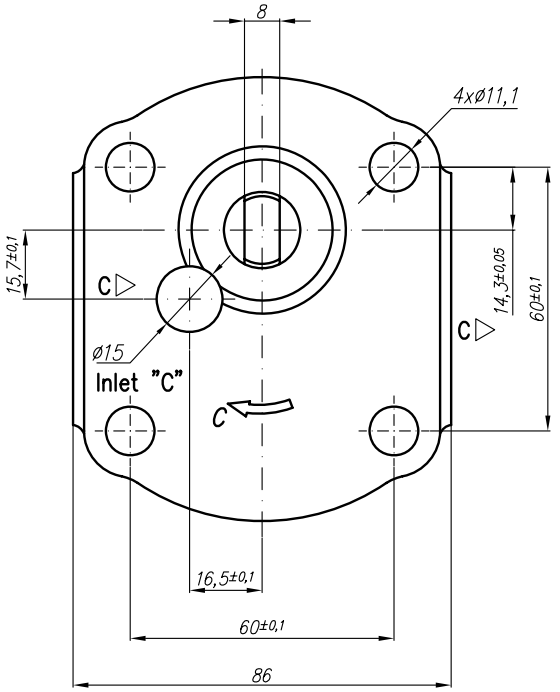

Rotation "C"

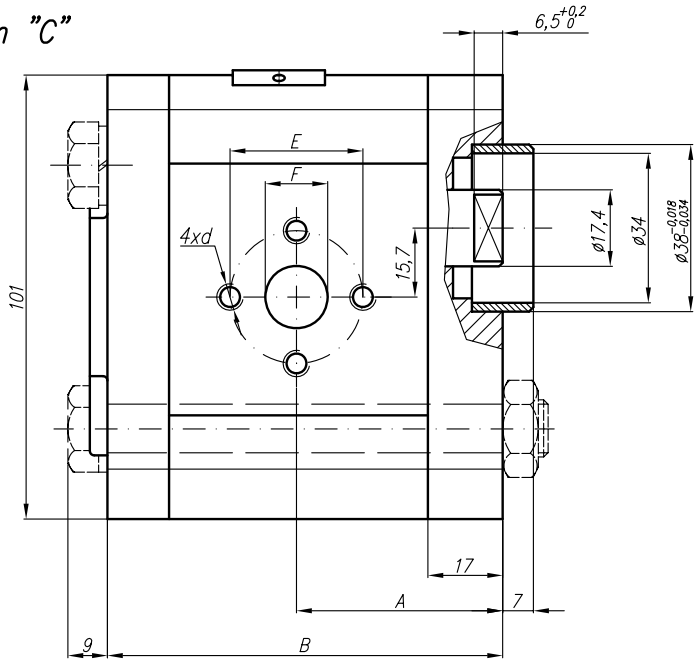

Rotation "A"

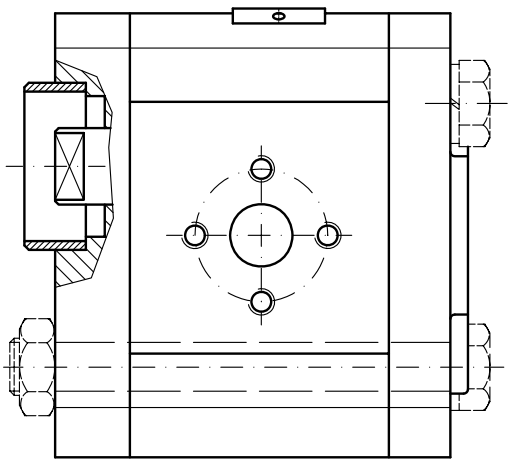

Symbol

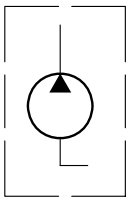

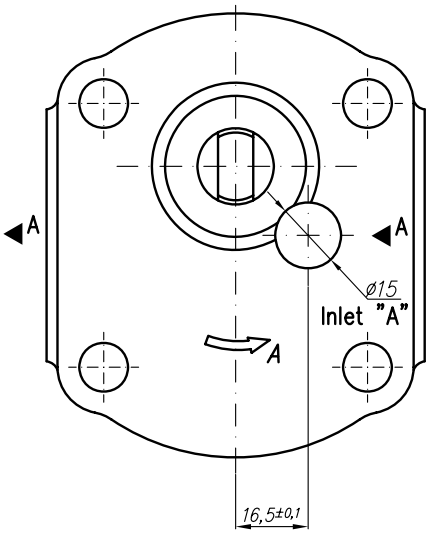

Type	Displacement	Flow		Pressure	max Speed	Dimension							
		at 1500 rpm	at max rpm	P_{nom}	n	A	B	Inlet			Outlet		
	cm^3/rev	l/min	l/min	bar	rpm	mm	mm	E	F	d	E	F	d
20A(C)4,5X536	4,5	6,14	14,33	250	3500						30,2		1/4"-20UNC
20A(C)6,3X536	6,3	8,69	20,29	250	3500								
20A(C)8,2X536	8,2	11,32	26,40	250	3500								
20A(C)10X536	10	13,95	32,55	250	3500							14,2	
20A(C)11X536	11,3	15,76	36,78	250	3500	46,9	89						
20A(C)12X536	12	16,92	39,48	250	3500								
20A(C)14X536	14	19,95	46,55	250	3500								
20A(C)15X536	15	21,60	36,00	250	2500								
20A(C)16X536	16	23,04	38,40	250	2500								
20A(C)19X536	19	27,36	45,60	200	2500								
20A(C)22X536	22	31,68	42,24	180	2000								
20A(C)25X536	25	36,00	48,00	160	2000								