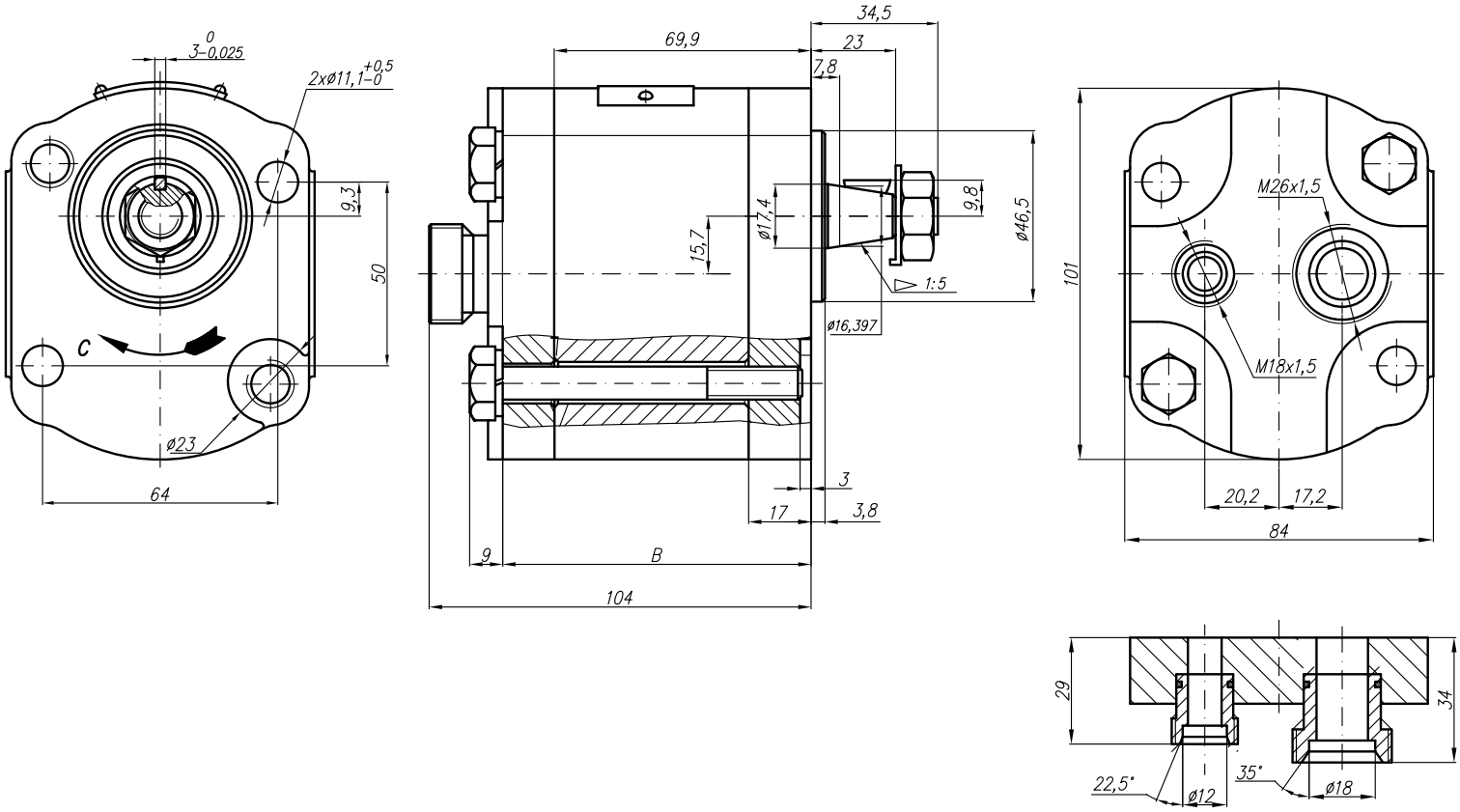

Type	Displacement	Flow		Pressure	max Speed	Dimension							
		at 1500 rpm	at max rpm	P_{nom}	n	A	B	Inlet			Outlet		
	cm^3/rev	l/min	l/min	bar	rpm	mm	mm	M	G	U	M	G	U
20C4,5X540WMS	4,5	6,14	14,33	250	3500			M26x1,5			M18x1,5		
20C6,3X540WMS	6,3	8,69	20,29	250	3500								
20C8,2X540WMS	8,2	11,32	26,40	250	3500		83,9						
20C10X540WMS	10	13,95	32,55	250	3500								
20C11X540WMS	11,3	15,76	36,78	250	3500								
20C12X540WMS	12	16,92	39,48	250	3500								
20C14X540WMS	14	19,95	46,55	250	3500								
20C15X540WMS	15	21,60	36,00	250	2500								
20C16X540WMS	16	23,04	38,40	250	2500								
20C19X540WMS	19	27,36	45,60	200	2500								
20C22X540WMS	22	31,68	42,24	180	2000								
20C25X540WMS	25	36,00	48,00	160	2000								