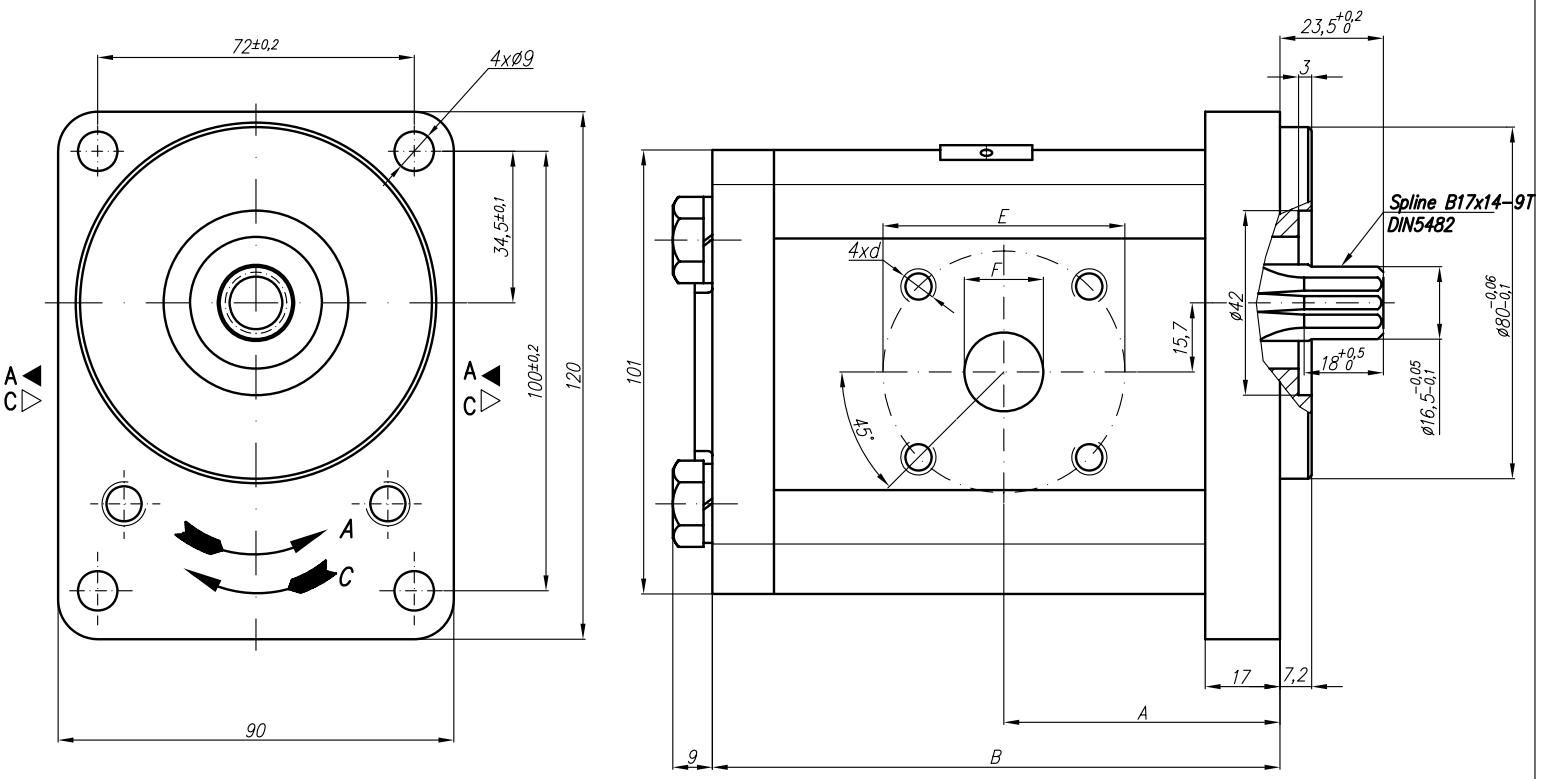

Type	Displacement	Flow		Pressure	max Speed	Dimension							
		at 1500 rpm	at max rpm	P_{nom}	n	A	B	Inlet			Outlet		
	cm^3/rev	l/min	l/min	bar	rpm	mm	mm	E	F	d	E	F	d
20A(C)14X581	14	20,16											
20A(C)15X581	15	21,60											
20A(C)16X581	16	23,04											
20A(C)17,3X581	17,3	24,91											
20A(C)18,2X581	18,2	26,21											
20A(C)19X581	19	27,36											
20A(C)22X581	22	31,68											
20A(C)25X581	25	36,00						55	29	M8-6H	55	18	M8-6H
20A(C)28X581	28	40,32	67,20	50	2500								
20A(C)32X581	32	46,08	61,44	50	2000								
20A(C)36X581	36	51,84	69,12	50	2000	62,8	129,1						