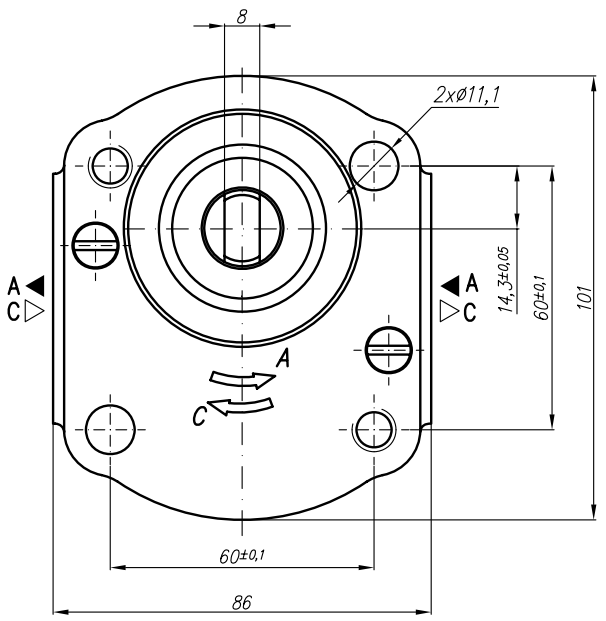

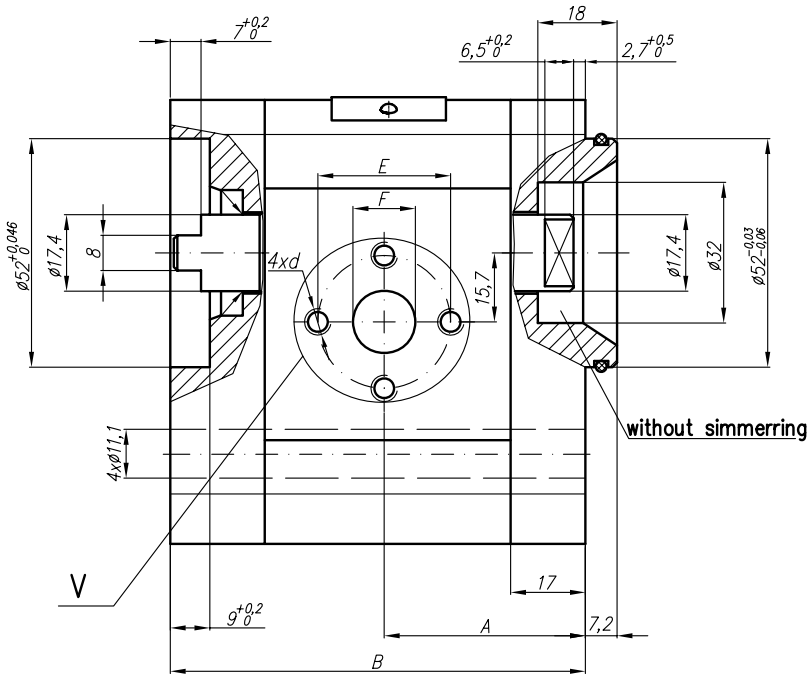

V
Variants for ports – M;G;U

Designations:

...X586 – Normal version (flanges);
...X586M – Metric threads;
...X586G – GAS threads;
...X586U – SAE UNF threads;

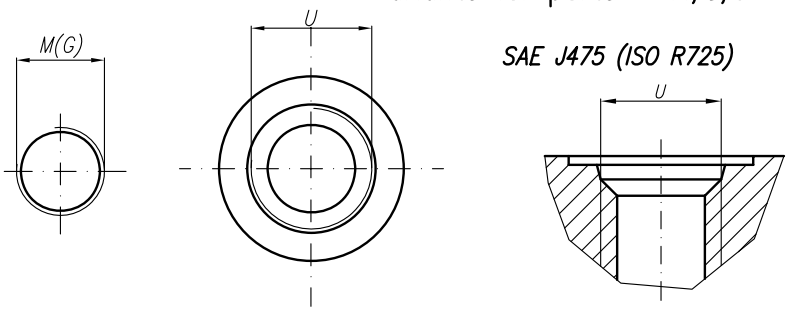

Type	Displacement	Flow		Pressure	max Speed	Dimension															
		at 1500 rpm	at max rpm	P_{nom}	n	A	B	Inlet						Outlet					
	cm^3/rev	l/min	l/min	bar	rpm	mm	mm	E	F	d	M	G	U	E	F	d	M	G	U
20A(C)4,5X586...	4,5	6,14	14,33	250	3500	40,5	85,2	30,2	13,1	M6-6H	M20x1,5	G1/2	1 1/16"-12UNF	30,2	13,1	M6-6H	M16x1,5	G1/2	7/8"-14UNF
20A(C)6,3X586...	6,3	8,69	20,29	250	3500	42	88,2												
20A(C)8,2X586...	8,2	11,32	26,40	250	3500	43,5	91,1												
20A(C)10X586...	10	13,95	32,55	250	3500	45	94,1	39,7	19	M8-6H		G3/4			14,2				
20A(C)11X586...	11,3	15,76	36,78	250	3500	46	96,2												
20A(C)12X586...	12	16,92	39,48	250	3500	46,6	97,5												
20A(C)14X586...	14	19,95	46,55	250	3500	48	100,6												
20A(C)15X586...	15	21,60	36,00	250	2500	49	102,1												
20A(C)16X586...	16	23,04	38,40	250	2500	50	103,8												
20A(C)19X586...	19	27,36	45,60	200	2500	52	108,7										M20x1,5		
20A(C)22X586...	22	31,68	42,24	180	2000	55	113,7												
20A(C)25X586...	25	36,00	48,00	160	2000	57,2	118,5							39,7	19	M8			