Designed as II section of tandem pump 22A(C)...X596/...X597

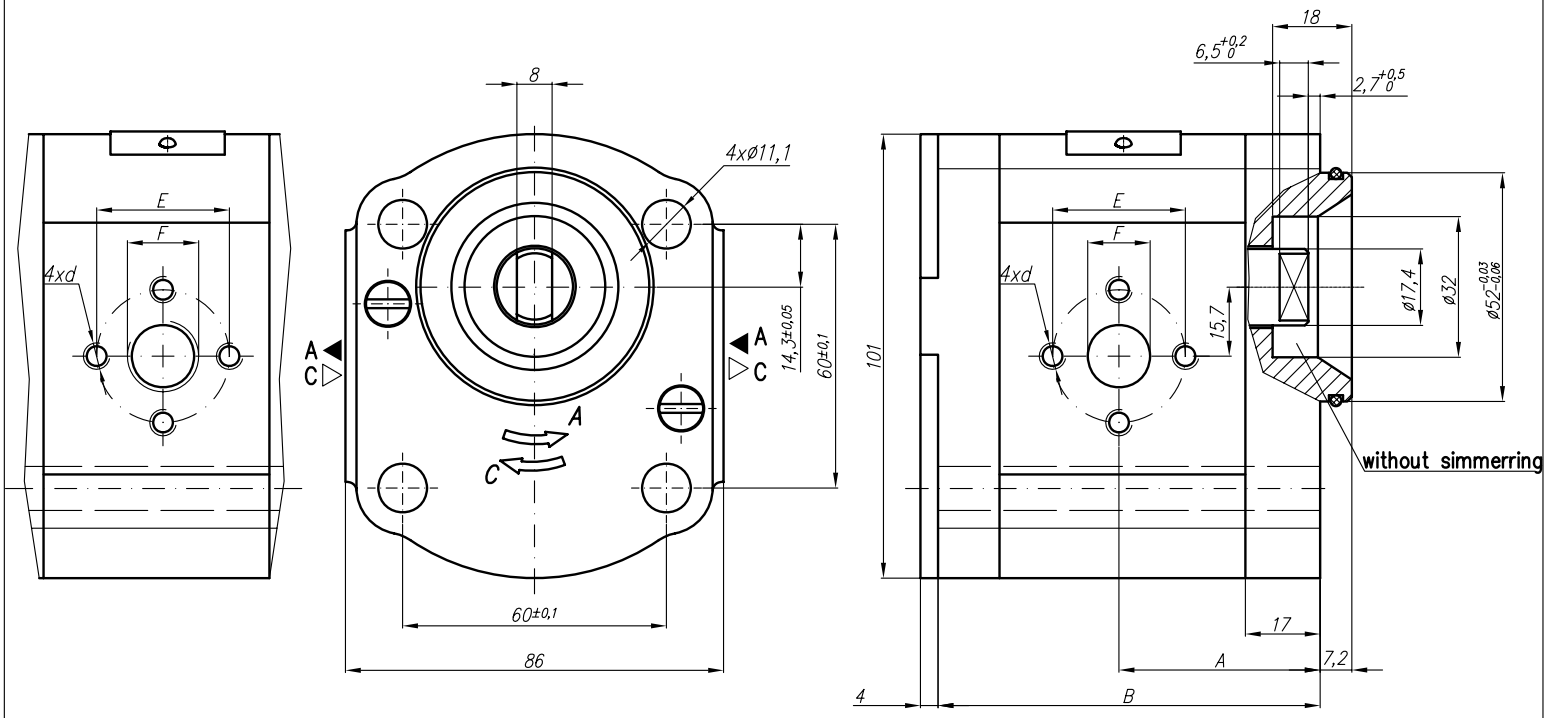

Type	Displacement	Flow		Pressure	max Speed	Dimension							
		at 1500 rpm	at max rpm	P_{nom}	n	A	B	Inlet			Outlet		
	cm^3/rev	l/min	l/min	bar	rpm	mm	mm	E	F	d	E	F	d
20A(C)4,5X597	4,5	6,14	14,33	250	3500	39,3	78	30,2	13,1	M6-6H	30,2	G3/8"	M6-6H
20A(C)6,3X597	6,3	8,69	20,29	250	3500								
20A(C)8,2X597	8,2	11,32	26,40	250	3500								
20A(C)10X597	10	13,95	32,55	250	3500								
20A(C)11X597	11,3	15,76	36,78	250	3500								
20A(C)12X597	12	16,92	39,48	250	3500								
20A(C)14X597	14	19,95	46,55	250	3500								
20A(C)15X597	15	21,60	36,00	250	2500								
20A(C)16X597	16	23,04	38,40	250	2500								
20A(C)19X597	19	27,36	45,60	200	2500								
20A(C)22X597	22	31,68	42,24	180	2000								
20A(C)25X597	25	36,00	48,00	160	2000								